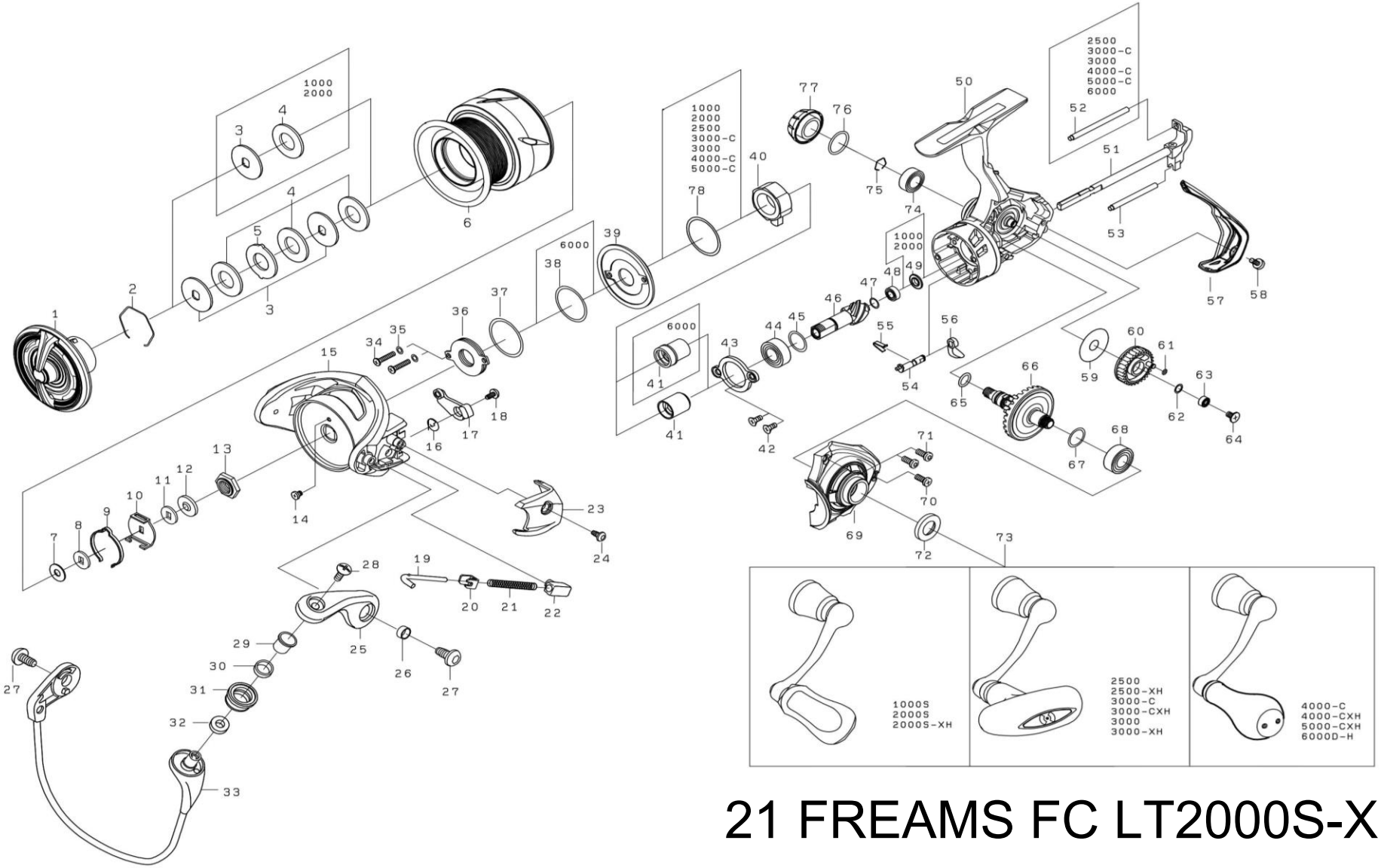

21 FREAMS FC LT2000S-XH

00060262