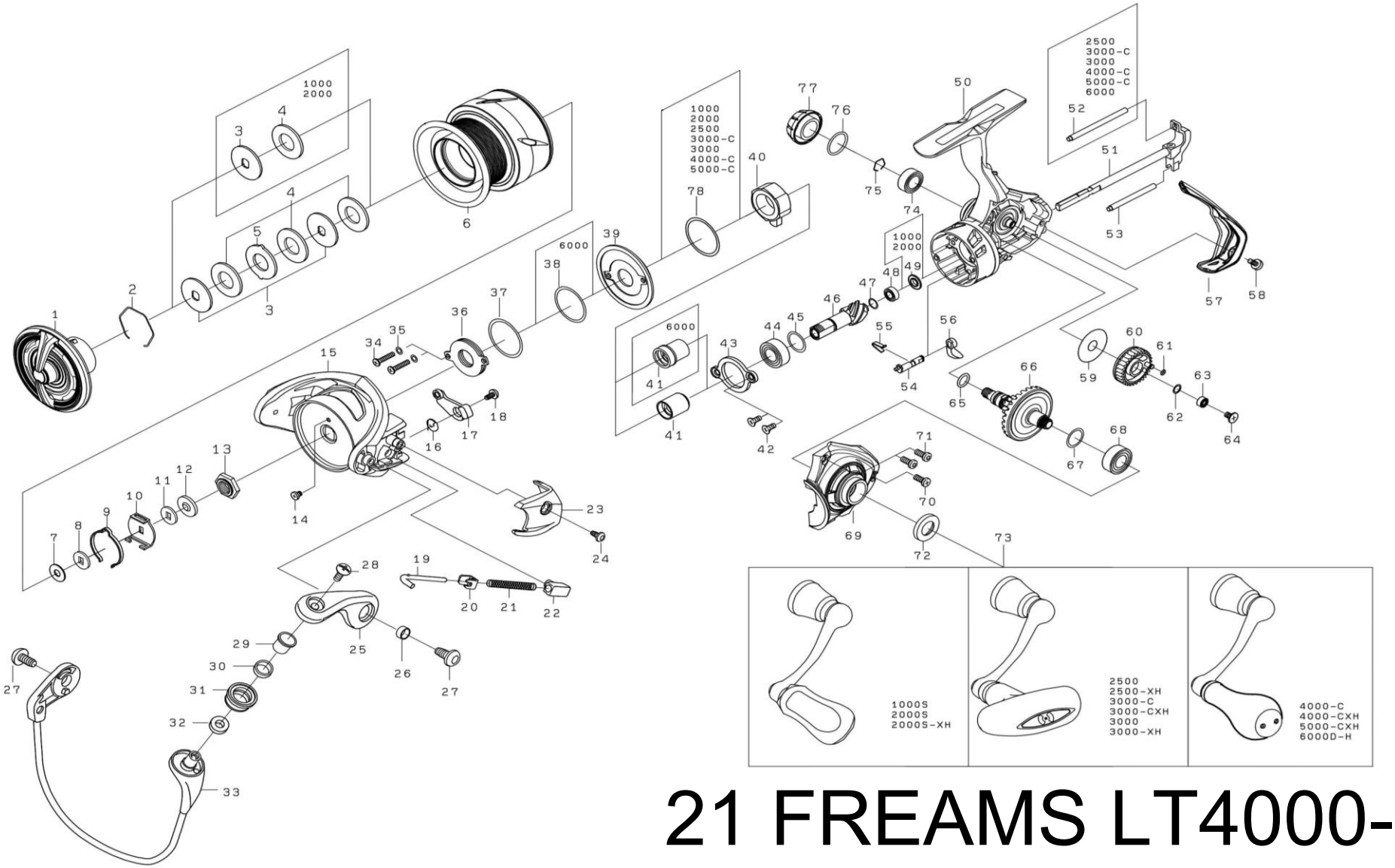

21 FREAMS LT4000-C

00060274