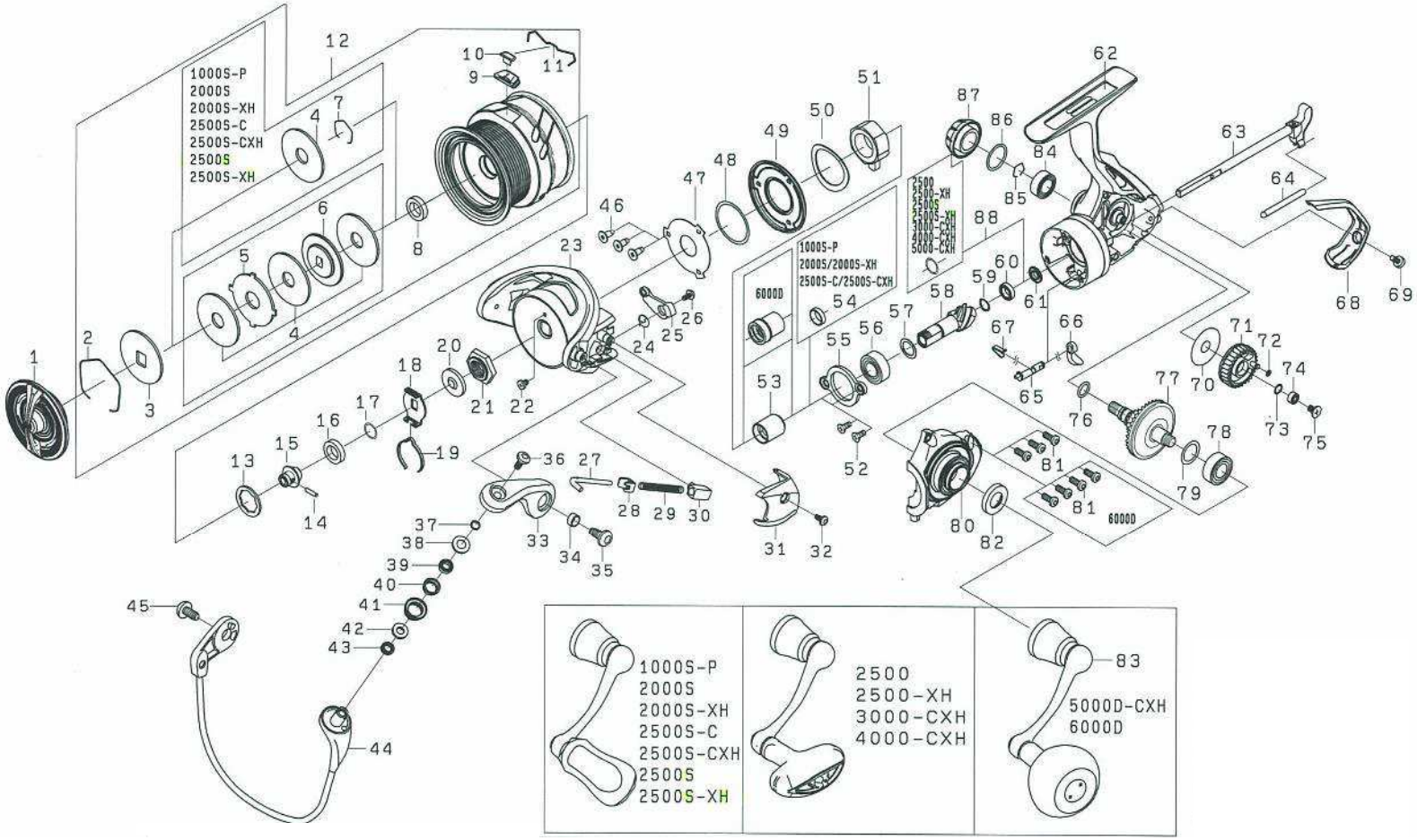
1000S-P
2000S
2000S-XH
2500S-C
2500S-CXH
2500S
2500S-XH
1000S-P
2000S/2000S-XH
2500S-C/2500S-CXH
6000D
2500
2500-XH
3000-CXH
4000-CXH
5000-CXH
6000D
1000S-P
2000S
2000S-XH
2500S-C
2500S-CXH
2500S
2500S-XH
2500
2500-XH
3000-CXH
4000-CXH
5000D-CXH
6000D